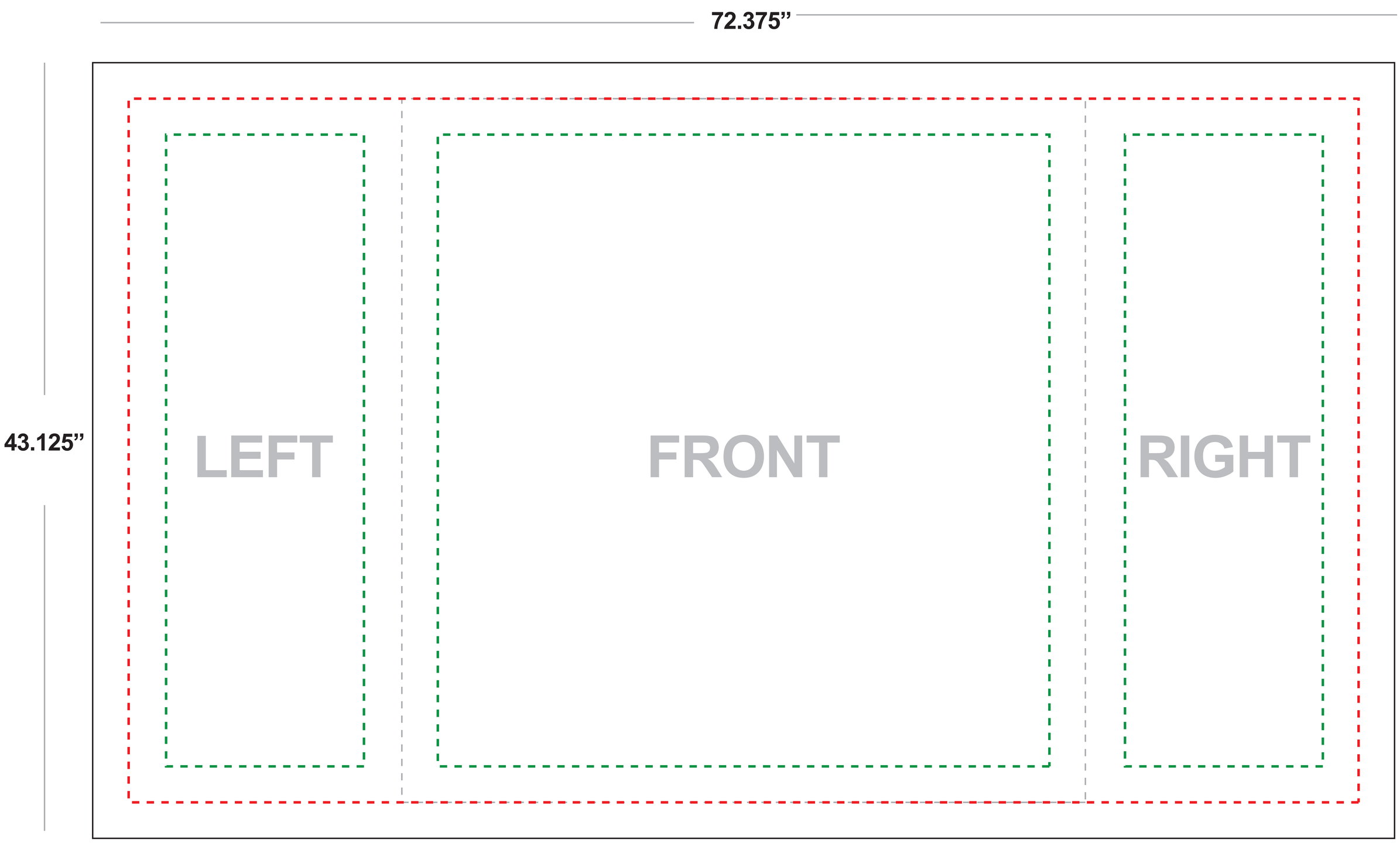

Popup Counter - Velcro Finishing

- - - - **Trim Line**
- - - - **Safety Area**

Please be sure to include the 2” bleed around the perimeter (note trim & stitch locations on template). DO NOT design any critical elements (text, logos, etc.) within 2” of the edge.

General Art Guidelines:

– CMYK Color Mode
– Embed all images and support files
– Resolution must be 100 dpi
– All fonts must be created to outlines
– Do not scale artboard
– Background color/images must bleed to the edge of artboard
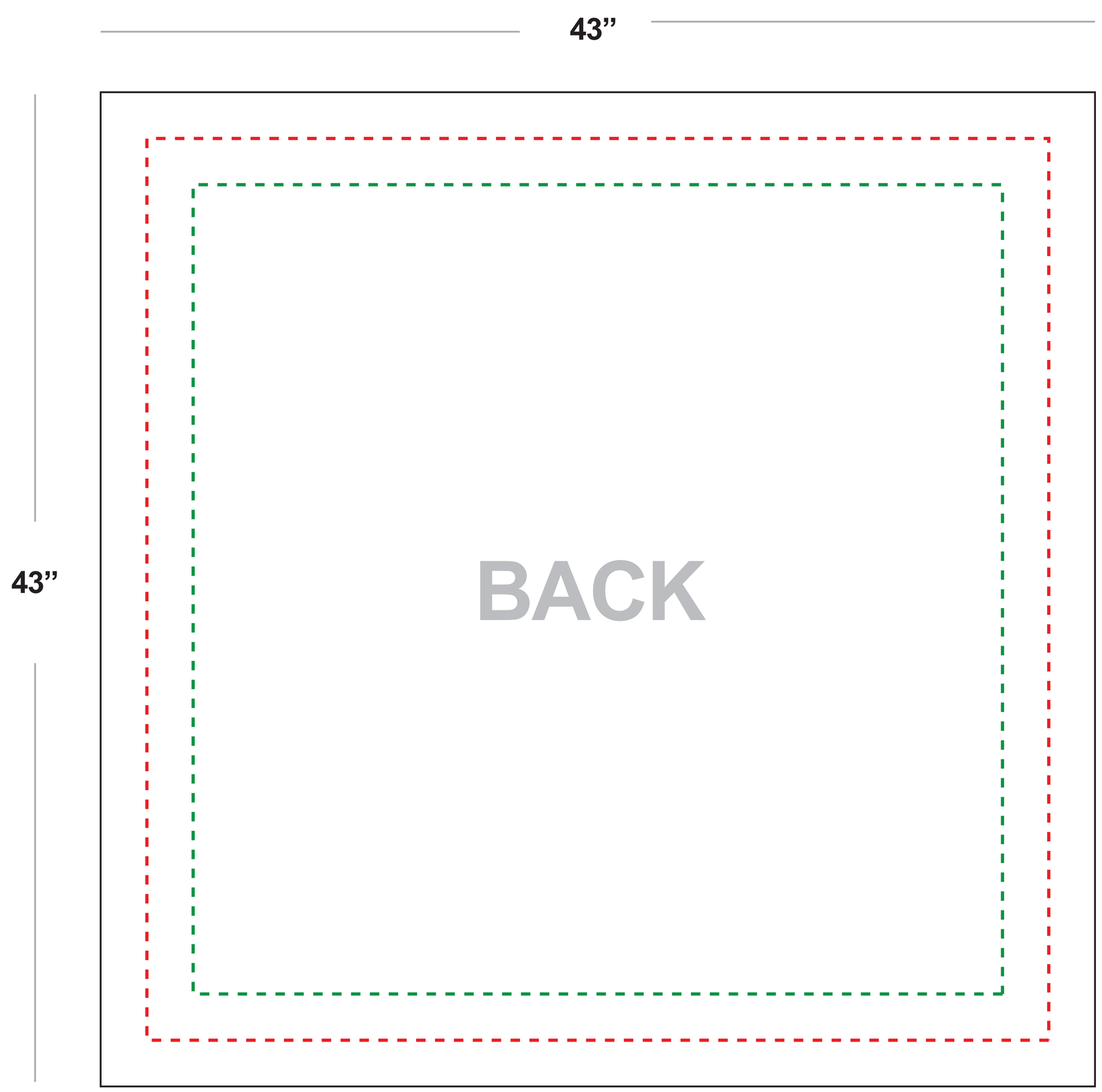
Save the artwork as PDF format